ULTRALIGHTS

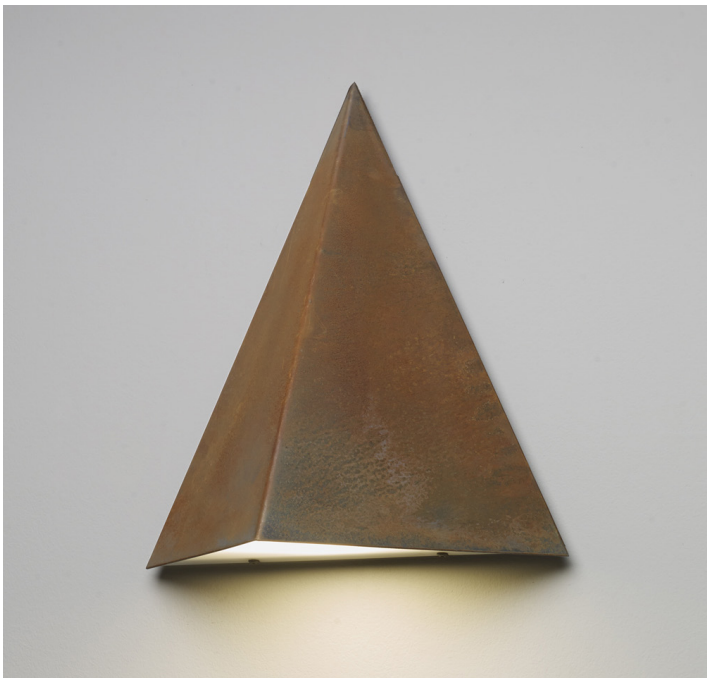

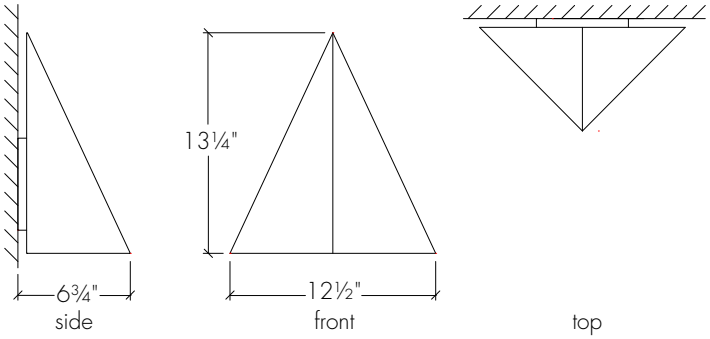

FORTIS 18401CS

Dark Sky Wet Location

Base Specifications:
13.25″h x 12.5″w x 6.75″d
02: Wet Loc LED - 16.8W (Std phase dim)
Opal Acrylic Diffuser
Dark Sky

Notes:
Corten Steel (CS) is a weathering steel that forms a stabilizing rust finish.
02 / 04 Lamping: Wattage and Lumens - Initial at the source

18401CS	-		-	
MODEL		DIFFUSER		LAMPING

Modifications:

FINISH

CS - Corten Steel (Base)

DIFFUSER

OA - Opal

LAMPING

02: Wet Loc LED - 16.8W - 2362 Lumens
- ☐ (Dim w/ Std Phase Dim) - 120V
- ☐ (Non-Dim or Dim w/ 0-10V Dim system) Universal

04: Dry / Damp LED - 16.8W - 2362 Lumens
(Non-Dim or Dim w/ 0-10V Dim system) - Universal

COLOR TEMPERATURE / CRI

- ☐ 3000K (Standard) - CRI available upon request
- ☐ 2700K - CRI available upon request
- ☐ 3500K - CRI available upon request
- ☐ 4000K - CRI available upon request

Project Name: Project Location:	Specifier Name: Specifier Location:	Quantity: Fixture Type:

320 S Plumer Avenue • Tucson, AZ 85719 • p +1 520 623 9829 • info@ultralightslighting.com